DWG NO.	REV.
OL-1206-205-1	A

1.0 PERFORMANCE
1.1 FREQUENCY RANGE: DC-27GHz
1.2 NOMINAL IMPEDANCE: 50 OHMS
1.3 VSWR:
DC 18GHz...1.10:1 TYP
18-27GHz...1.15:1 TYP
1.4 TEMPERATURE RANGE: -65/+165°C
2.0 MATERIALS
2.1 BODY: SS 303, ASTM-A-582
2.2 CONTACT: BeCu, ASTM-B-196
2.3 DIELECTRIC: PTFE, ASTM-D-1710
ULTEM 1000, ASTM D5205

3.0 FINISH
3.1 BODY: PASSIVATE, ASTM-A-967
3.2 CONTACT: GOLD, ASTM-B488, TYPE II, CODE C, CLASS 1,27
4.0 MECHANICAL
4.1 INTERFACES: MIL-STD-348
4.2 CONTACT RETENTION: 6 LBS AXIAL
4.3 DURABILITY: 500 CYCLES

PART NUMBER	∅ PIN	MAX PIN DEPTH	∅ A
1206-205-M12-PJ	.0120±.001	.075	.0765
1206-205-M15-PJ	.0150±.001	.100	.0765
1206-205-M20-PJ	.0200±.001	.100	.1045

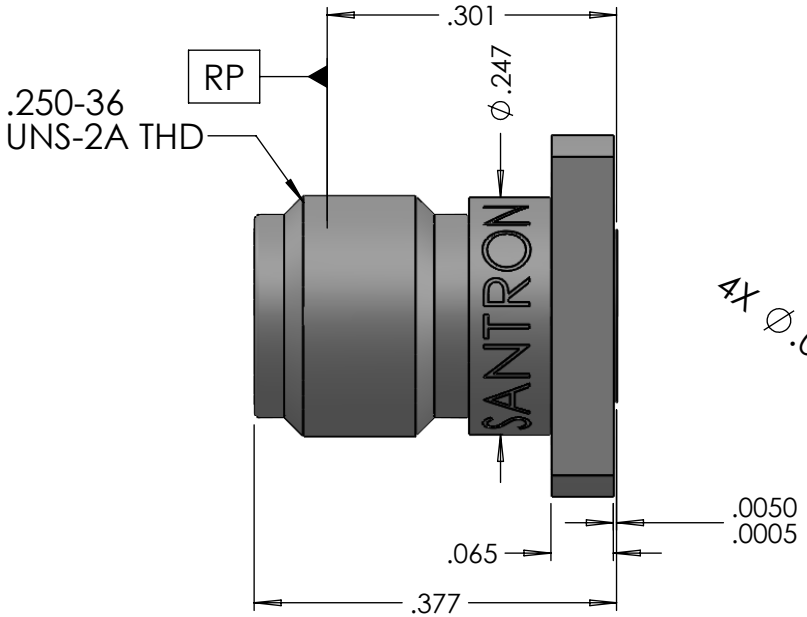

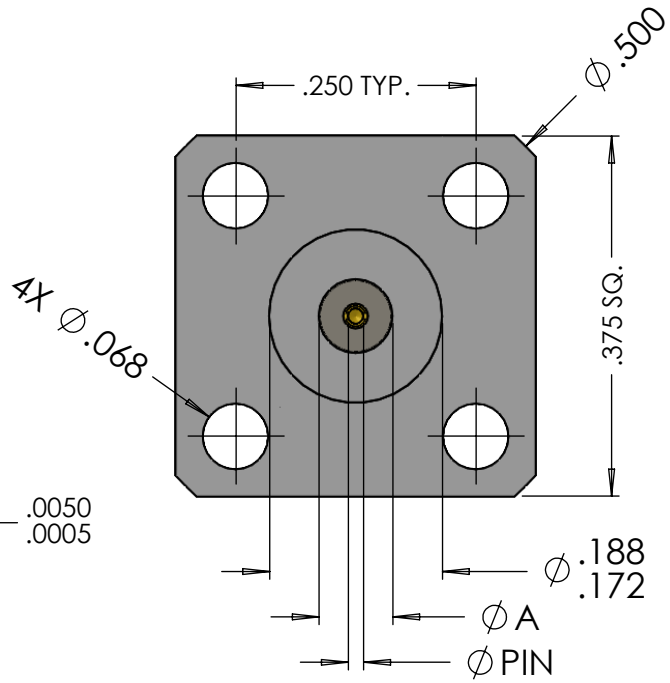

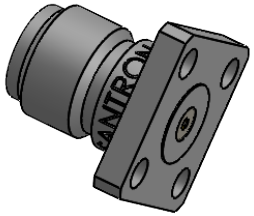

REVISIONS				
REV.	DESCRIPTION	DISP	DATE	APPROVED
A1	REMOVE -M18 P/N	NEW	6/25/20	ST
A	RELEASE	NEW	11/15/19	FSH

Material: SEE NOTES

Finish: SEE TABLE

UNLESS OTHERWISE SPECIFIED:
ALL DIMENSIONS ARE IN INCHES.
ALL DIMESNSIONS ARE AFTER PLATING.
.XXX = ±.005 ALL MACHINED SURFACES 63 MAX.
.XX= ±.01 ANG. ±1/2° FRACTIONAL = ± 1/64
◎ .004 MAX TIR. ⊥ AXIS .001

Projection Method: THIRD ANGLE

REMOVE ALL BURRS AND SHARP EDGES .005 MAX

This drawing and any information or descriptive material set out on it are the confidential and copyright property of SAN-TRON, INC. © and MUST NOT BE DISCLOSED, COPIED, LOANED in whole or part or used for any purpose without the written permission of SAN-TRON, INC.

Company Confidential

Legal Owner:
SAN-TRON, INC.
4 TURNPIKE ROAD. IPSWICH MA USA 01938
TEL: 978-356-1585 FAX: 978-356-1573
WWW.santron.com EMAIL: santron@santron.com

REF:
CAGE CODE: 50896
Sheet: 1 of 1

Description:

SMA JACK (FEMALE) 3/8" SQ FLANGE

Designed by: ST	Drawn Date: 8/26/2019
Checked by: FSH	Checked Date: 11/15/2019
Approved by: FSH	Approved Date: 11/15/2019