DATE REVISED: 11/12/14

CATALOG NUMBER
9001-942-3

MATERIAL AND FINISH

LOCATOR TOOL: 17-4 PH STAINLESS STEEL; PASSIVATED

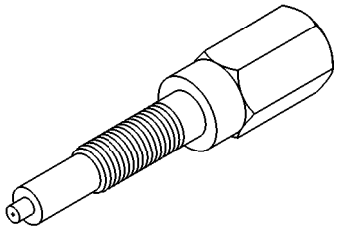

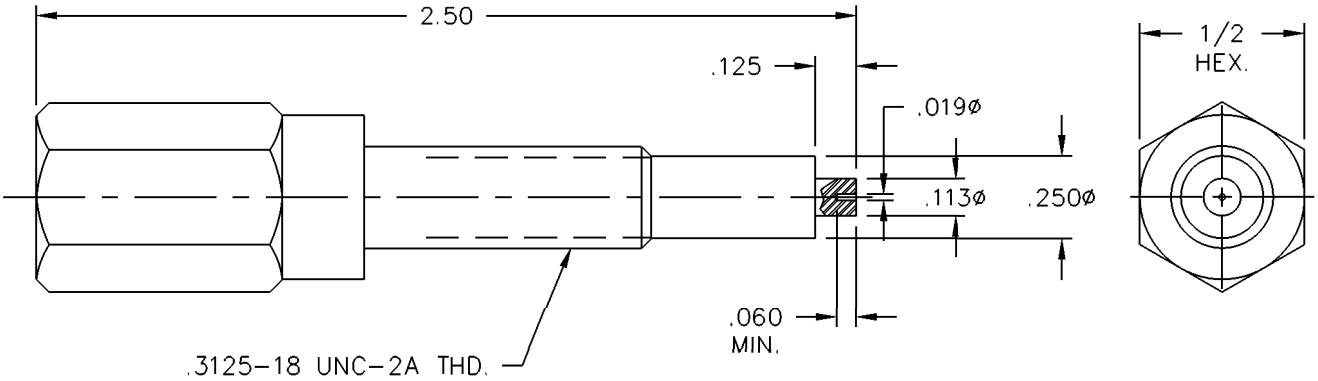

This drawing and any data contained herein is the property of Corning Gilbert Inc., and constitutes and contains proprietary and confidential information. Neither receipt nor possession of this drawing confers or transfers any right to duplicate, use or disclose any information contained herein except as expressly authorized by Corning Gilbert Inc.

GPO LOCATOR TOOL	IDENT CODE: 82316	Corning Gilbert Inc.
	REVISION: B	

SOURCE FILE: F-327, MECR# 3729	DWG. NO.: OL-9001-942-3	ASSY. PROC.: —