ELECTRICAL SPECIFICATIONS

FREQUENCY RANGE (GHz):	1.000-2.000
IMPEDANCE (NOMINAL):	50 Ohms
VSWR:	1.20 TYP/1.30 MAX
INSERTION LOSS (dB):	0.40 TYP/0.5 MAX
ISOLATION (dB):	18 MIN/20 TYP
POWER: AVG:	10 W

MECHANICAL SPECIFICATIONS

CONNECTORS:	SMA-FEMALE, NICKEL PLATED BRASS
CONTACT PINS:	BERYLLIUM COPPER, GOLD PLATE
OPERATING TEMPERATURE:	0°C TO +55°C
WEIGHT (APPROX):	16.0 oz

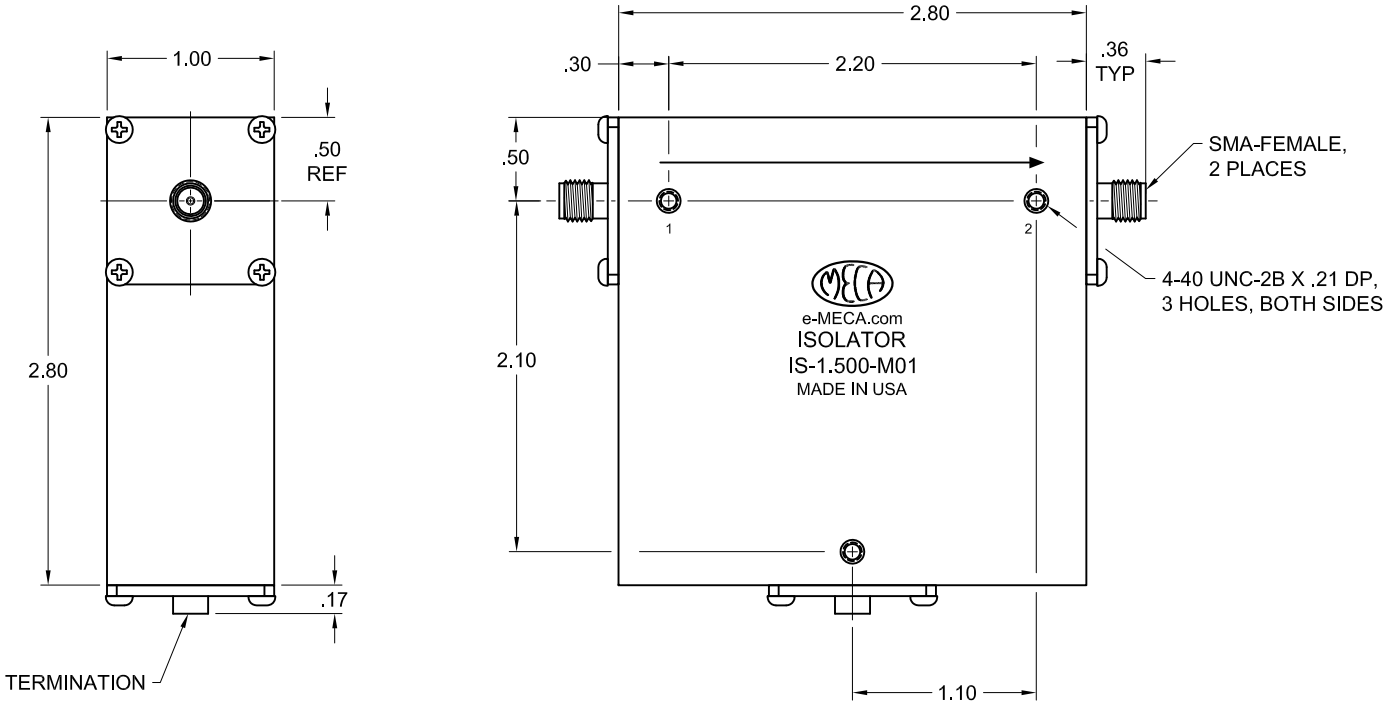

SCHEMATIC:

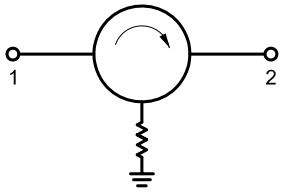

LTR	PG	DESCRIPTION	DATE	DR	APP
B		SEE DCN #110826-5	08/29/11	M.OC.	RR
A		NEW	05/31/11	NL	RR

MATERIAL: SEE ABOVE

FINISH: SEE ABOVE

UNLESS OTHERWISE SPECIFIED, DIMENSIONS ARE IN INCHES

TOLERANCES
2 PLACES: ±.03
3 PLACES: ±.010
ANGLES: N/A

DRAWN: NL DATE: 05/31/11

APPROVED: RR DATE: 05/31/11

TIR: N/A

SCALE: NTS

SHEET: 1 OF 1

SIZE A

ELECTRONICS, INC.
DENVILLE, NEW JERSEY
e-MECA.com

TITLE
ISOLATOR, 1.000-2.000 GHz,
SMA-FEMALE

CODE IDENT. NO. 22424

DRAWING NO. IS-1.500-M01

REV B