CATALOG NUMBER	"A" INTERFACE
R032–L43–10	FULL DETENT
R032–L44–10	LIMITED DETENT
R032–L45–10	SMOOTH BORE

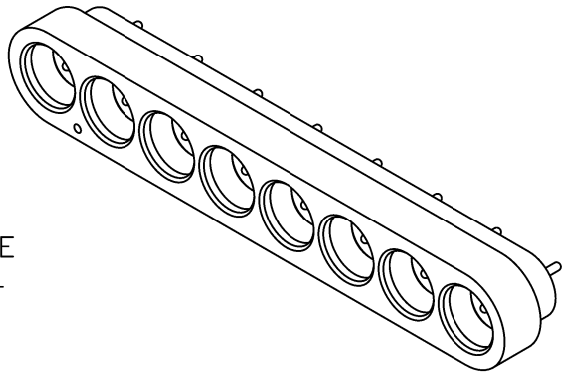

MATERIAL AND FINISH

MOUNTING BLOCK AND CENTER PINS: IRON–NICKEL–COBALT SEALING ALLOY (KOVAR) PER ASTM F 15; GOLD PLATE

DIELECTRICS: CORNING 7070 GLASS OR EQUIVALENT

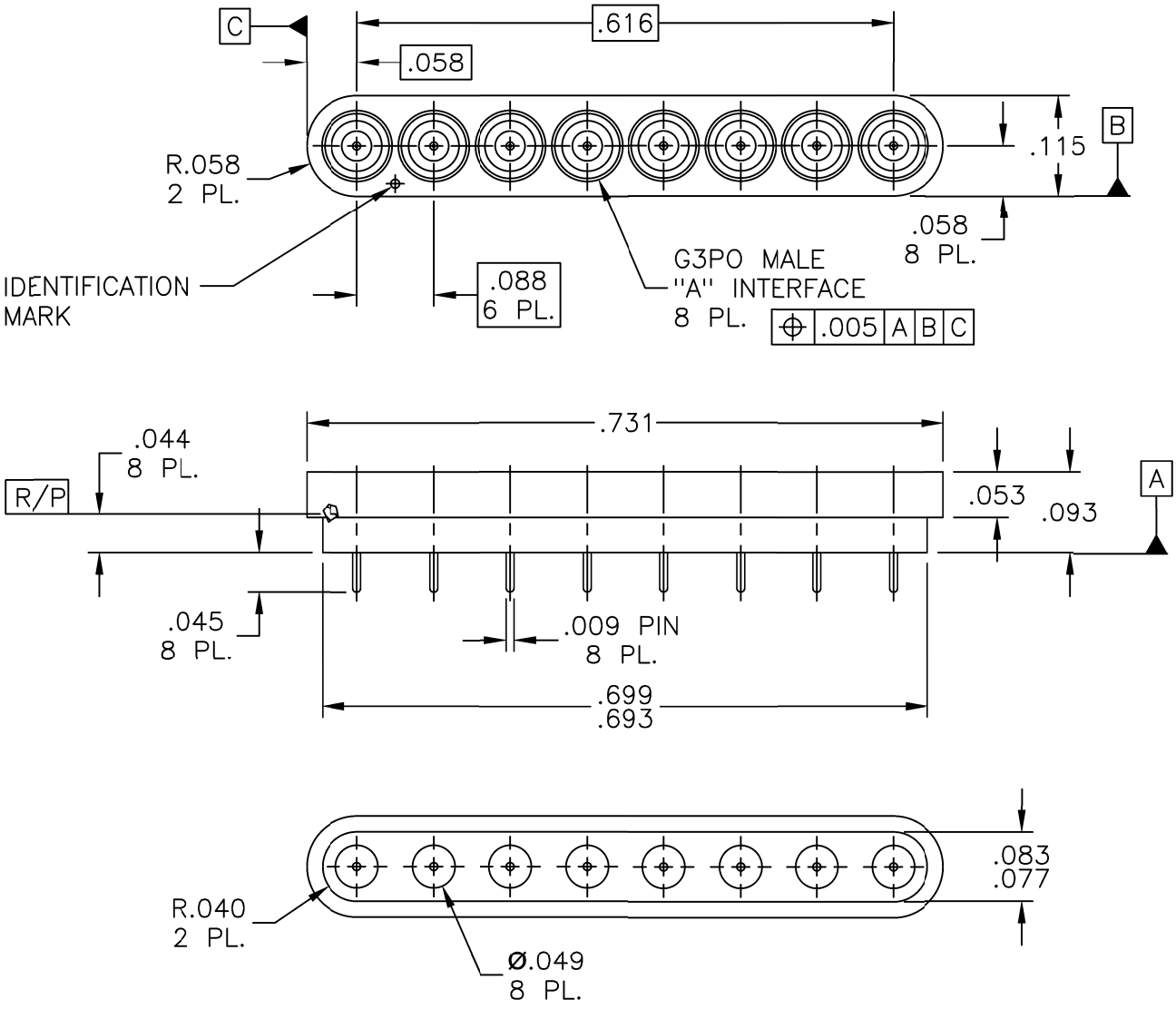

This drawing and any data contained herein is the property of Corning Gilbert Inc., and constitutes and contains proprietary and confidential information. Neither receipt nor possession of this drawing confers or transfers any right to duplicate, use or disclose any information contained herein except as expressly authorized by Corning Gilbert Inc.

G3PO MALE 8 POSITION HERMETIC BLOCK (TAB DETENT)	IDENT CODE: 82316 REVISION: 01	Corning Gilbert Inc.

SOURCE FILE: SK–5287	DWG. NO.: OL–R032–L4X–10	ASSY. PROC.: —