CAD DRAWING - NO MANUAL REVISIONS
filename:\\PALCODC\BigBoy\Drawings from server2\Autodesk Inventor Data Base\Adaptors\2605\2605-0100-00G.idw

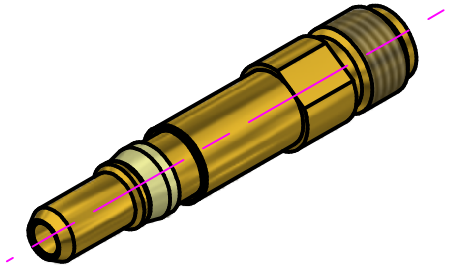

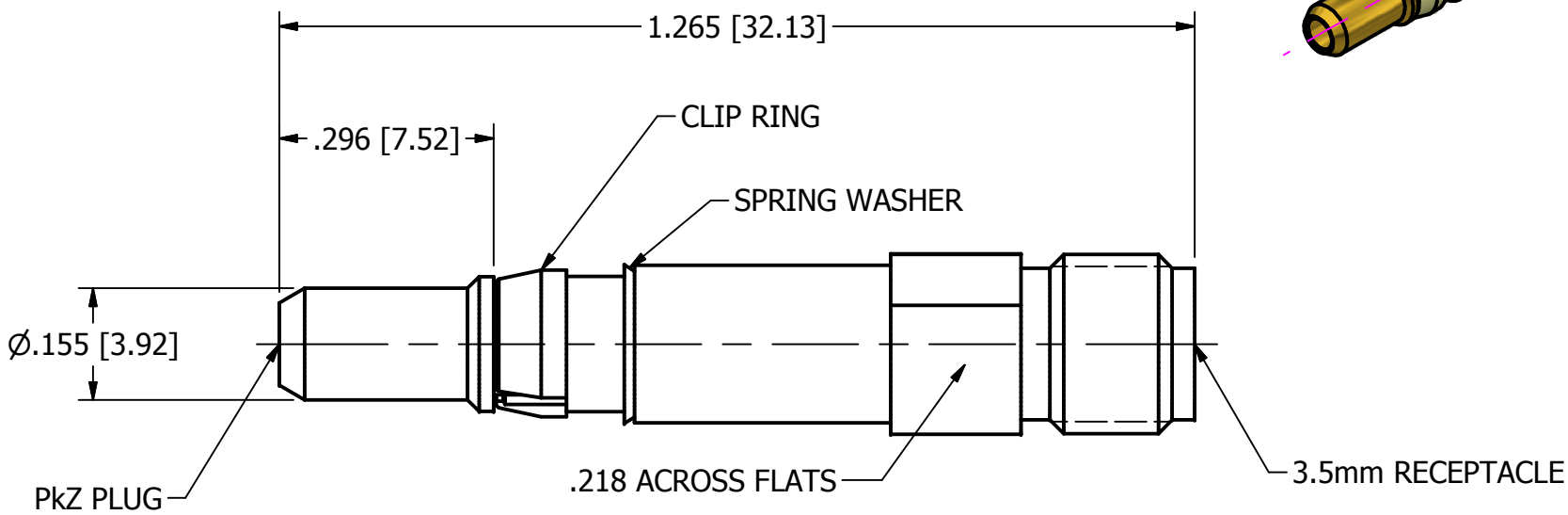

NOTES:
1. DESIGN AND INTERFACE PER IDS-26 & 05.
2. ELECTRICALS:
 2.1 IMPEDANCE: 50 OHMS
 2.2 FREQUENCY: DC TO 32 GHz.
 2.3 VSWR: 1.30:1 TO 26.5 GHZ.
 1.35:1 TO 32 GHZ.

MATERIAL:

REV.	DESCRIPTION	DATE	APPR.
G	PER ECN 13047	7/3/2018	JEM
F	PER ECN 12550	7/5/2017	RMB
E	PER ECN 12082	1/22/2015	JEM
D	PER ECN 11974	9/8/2014	JEM
C	PER ECN 11946	8/4/2014	JEM
B	PER ECN 11850	2/4/2014	JEM
A	REL. PER ECN 11835	1/14/2014	JEM

UNLESS OTHERWISE SPECIFIED, PALCO WORKMANSHIP STANDARDS APPLY
DIMENSIONS IN INCHES OR (METRIC)
DO NOT SCALE PRINTS
TOLERANCES ARE:
FRACTIONS: ± 1/64
DECIMALS: .XX ± .01
.XXX ± .005
ANGLES: ± 1/2°
32√

THE INFORMATION IN THIS DOCUMENT IS CONFIDENTIAL AND PROPRIETARY AND MAY NOT BE USED FOR ANY PURPOSE WITHOUT THE WRITTEN CONSENT OF PALCO.

APPROVALS		DATE
DRAWN	J. Maturo	01/14/14
CHECKED		
QA	V. Iannaccone	01/17/14
MFG		
ENGINEER	LRG	01/14/14
APPROVED		

PALCO CONNECTOR
22 GREAT HILL RD., NAUGATUCK, CT 06770

TITLE
PkZ PLUG TO
3.5mm RECEPTACLE ADAPTOR

SIZE	FSCM	DWG NO	REV	PLATING OPT.
A	58167	2605-0100-00	G	G

SCALE | F.S.R. # | SHEET 1 OF 1