ELECTRICAL SPECIFICATIONS

FREQUENCY RANGE (GHz):	7.000 - 12.400
IMPEDANCE (NOMINAL):	50 OHMS
VSWR (MAX): MAIN LINE:	1.30:1
SECONDARY LINE:	1.30:1
COUPLING (NOMINAL): (INCLUDES ALL VARIATIONS)	* NOM ± 1.00 dB
DIRECTIVITY (MIN):	17 dB
INSERTION LOSS (MAX): (EXCLUDING COUPLED POWER)	0.35 dB
POWER (AVG):	SEE TABLE
(PEAK):	3000 W

* NOMINAL COUPLING VALUES OF 6, 10, 20, & 30 dB AVAILABLE

MECHANICAL SPECIFICATIONS

CONNECTORS:	SMA-FEMALE, STAINLESS STEEL, PASSIVATE
CONTACT PINS:	BERYLLIUM COPPER, GOLD PLATE
HOUSING:	ALUMINUM, RoHS COMPLIANT IRIDITE
INSULATORS:	PTFE, VIRGIN ELECTRICAL GRADE
OPERATING TEMP:	-55°C TO +85°C
WEIGHT:	0.8 oz.

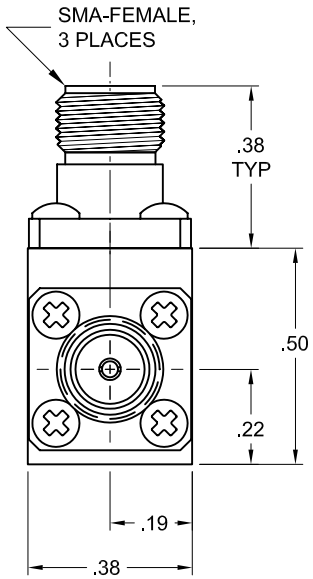

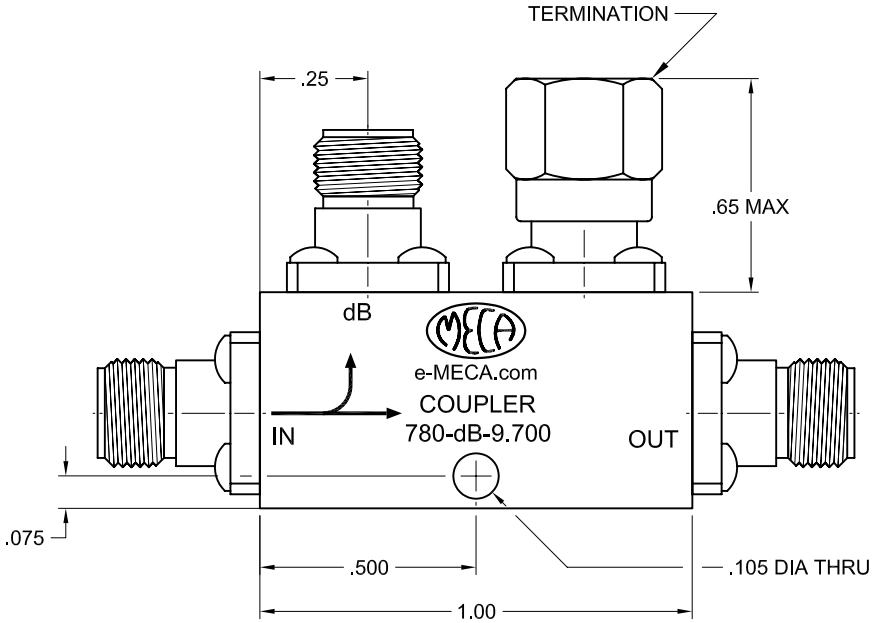

PART NO.	COUPLING (dB) (NOMINAL)	POWER RATING (WATTS)	
		FORWARD	REVERSE
780-06-9.700	6	50	2
780-10-9.700	10	50	5
780-20-9.700	20	50	50
780-30-9.700	30	50	50

LTR	PG	DESCRIPTION	DATE	DR	APP
D		SEE DCN # 100604-1	06/04/10	NL	JS
C		SEE DCN # 080808-6	08/14/08	GQ	RR

MATERIAL: SEE ABOVE

FINISH: SEE ABOVE

UNLESS OTHERWISE SPECIFIED, DIMENSIONS ARE IN INCHES

TOLERANCES
2 PLACES: ±.02
3 PLACES: ±.010
ANGLES: N/A

DRAWN: AI DATE: 10/13/05

APPROVED: JL DATE: 10/13/05

TIR: N/A

SCALE: NTS

SHEET: 1 OF 1

SIZE A

ELECTRONICS, INC.
DENVILLE, NEW JERSEY
e-MECA.com

TITLE
DIRECTIONAL COUPLER,
7.000 - 12.400 GHz, SMA-FEMALE CONNECTORS

CODE IDENT. NO. 22424

DRAWING NO. 780-dB-9.700

REV D